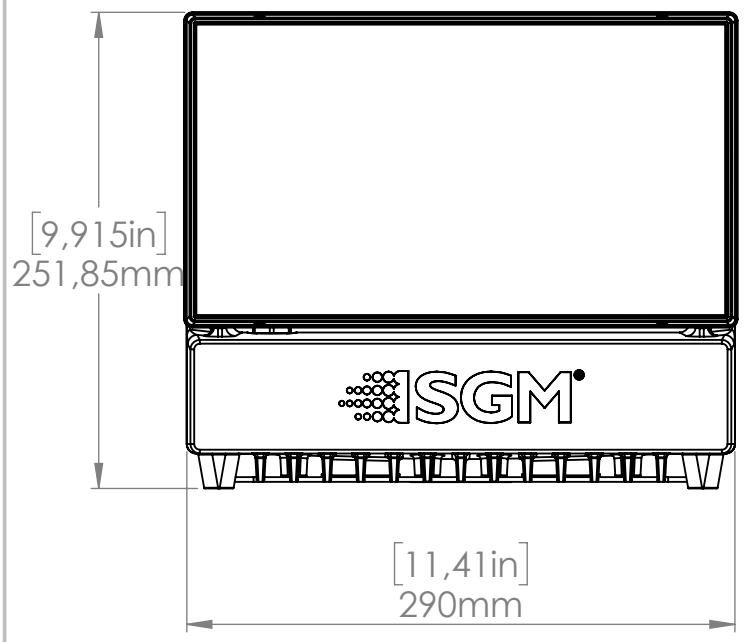

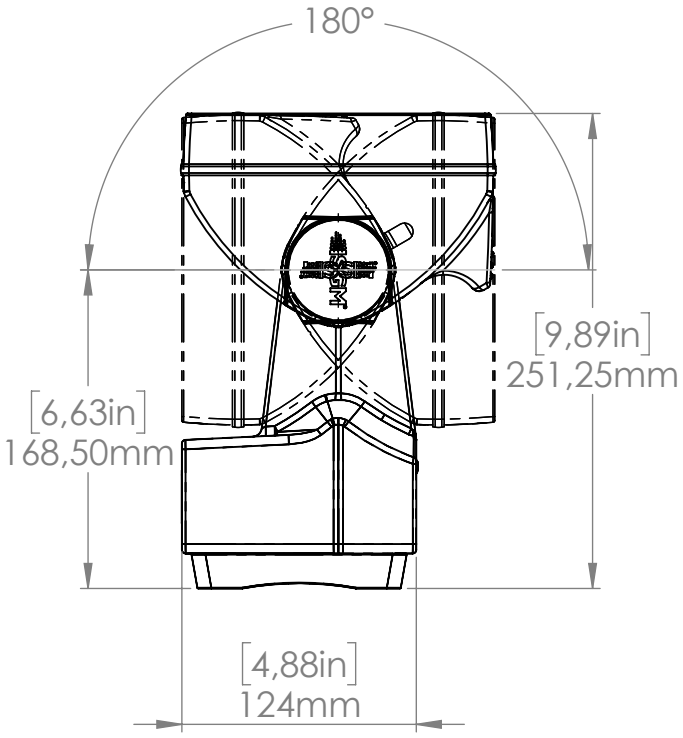

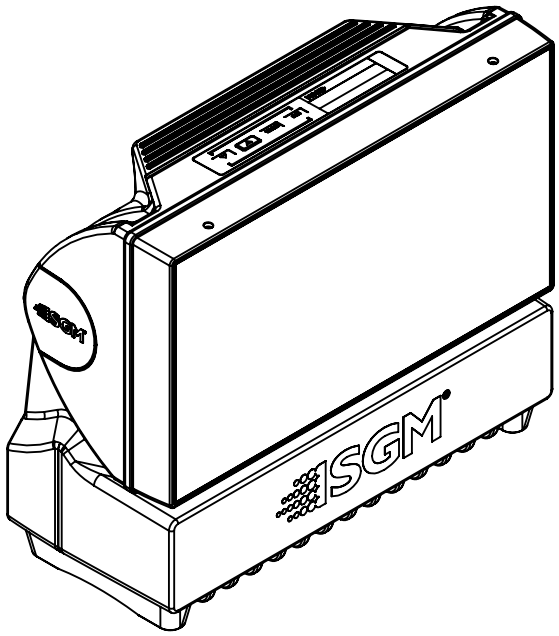

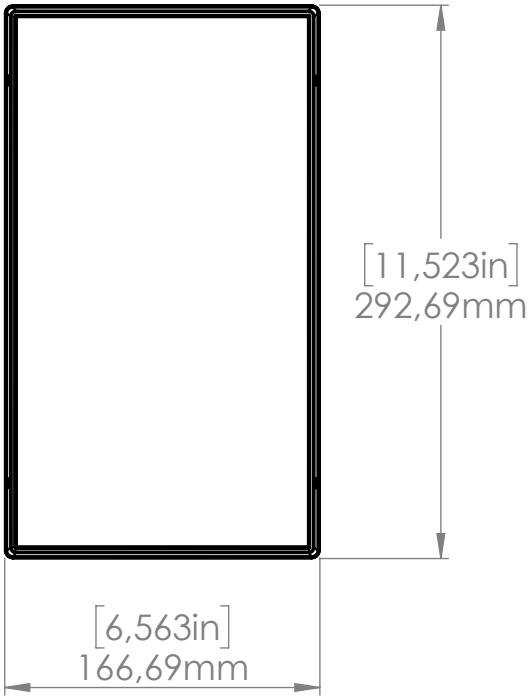

SGM®	SCALE:1:4	SHEET 1 OF 2	DWG NO.
	SHEET FORMAT: A4		80032000
	DO NOT SCALE DRAWING		

TITLE: P-3 Vision, S, BL

Copyright © SGM Light A/S. All rights reserved.

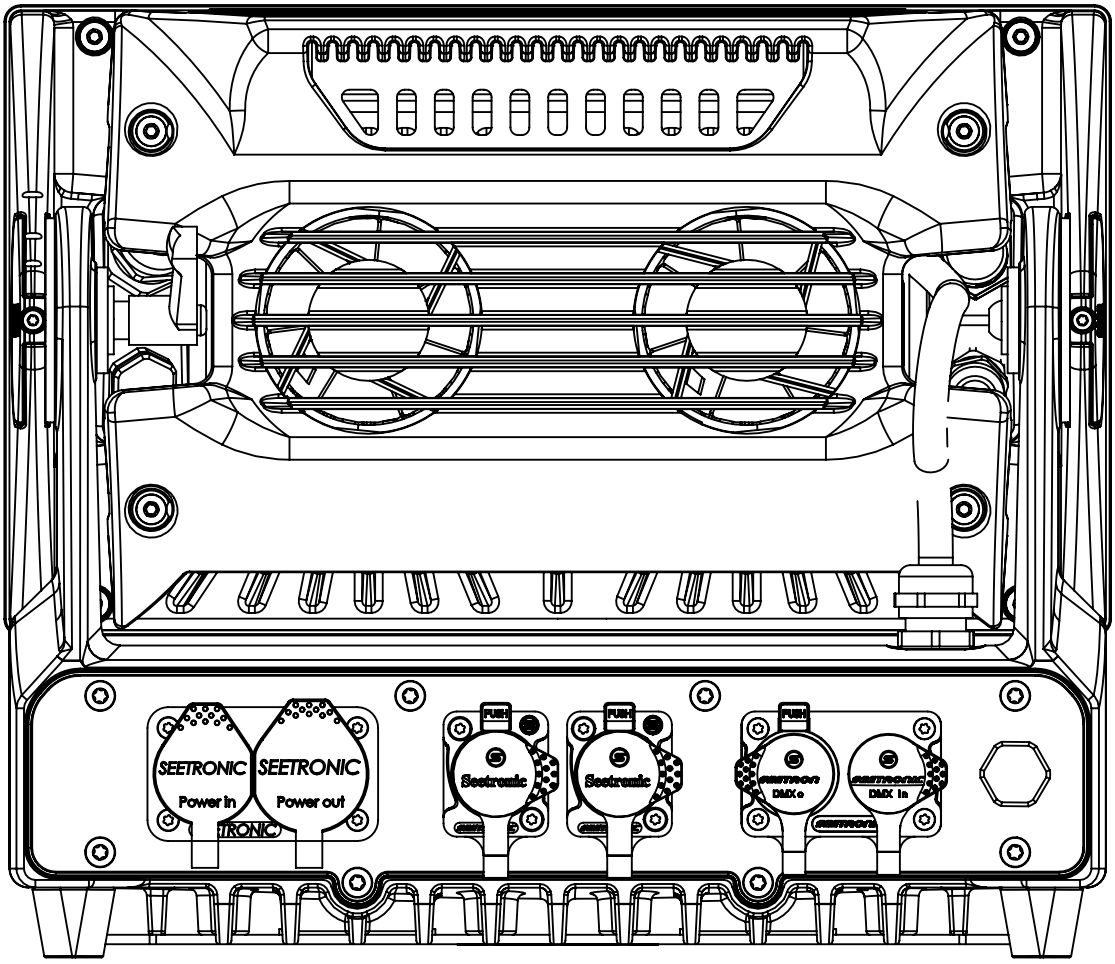

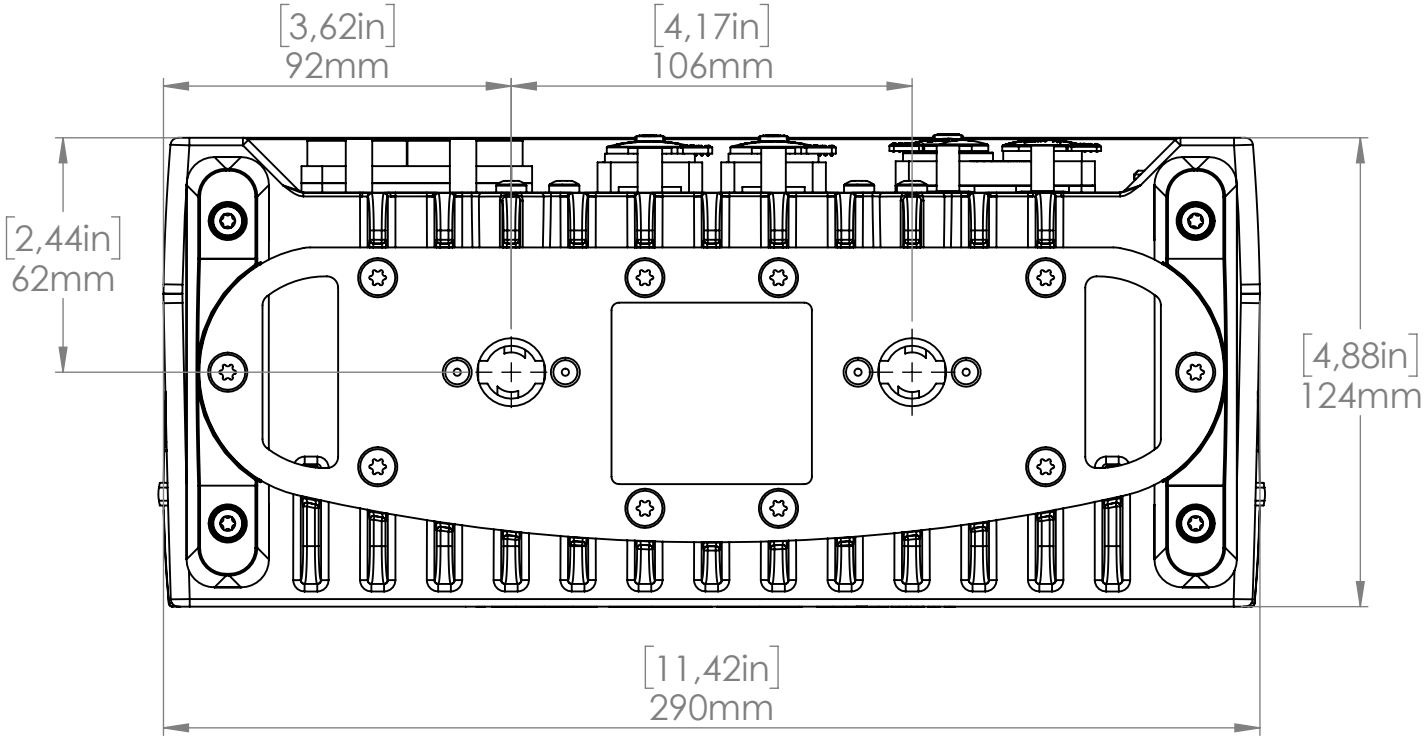

SGM®	SCALE:1:2	SHEET 2 OF 2	DWG NO.
	SHEET FORMAT: A4		80032000
	DO NOT SCALE DRAWING		

TITLE: P-3 Vision, S, BL

Copyright © SGM Light A/S. All rights reserved.